SAS GANGWAY

Standard Features

- Steel constructed gangway panels and stringer housings
- Tread support bars rotate on factory sealed flange mount bearings
- Treads are serrated non-slip grating
- Rigid handrails and midrails while in any position
- Rubber bumpers to stabilize and protect from scratches and dings
- Factory set, heavily constructed tension spring balance mechanisms

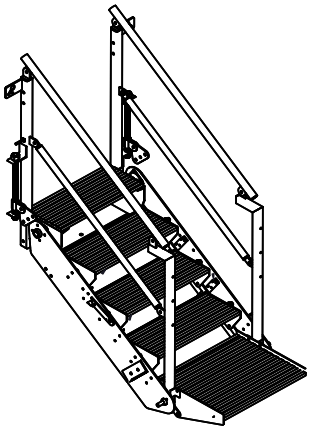

Self Adjusting Stair Gangway (SAS)

Hemco's Self Adjusting Stair gangway (SAS) provides safe access where there are numerous height differences in tanker trucks and railcars being serviced from the same elevated walkway. Standard models are available in 3 tread, 4 tread, 5 tread and 6 tread, each having the ability to reach out as far from the elevated walkway as needed. Longer stringers are available, but may require hydraulic assistance for ease of folding up and down.

Side View (with Cage)

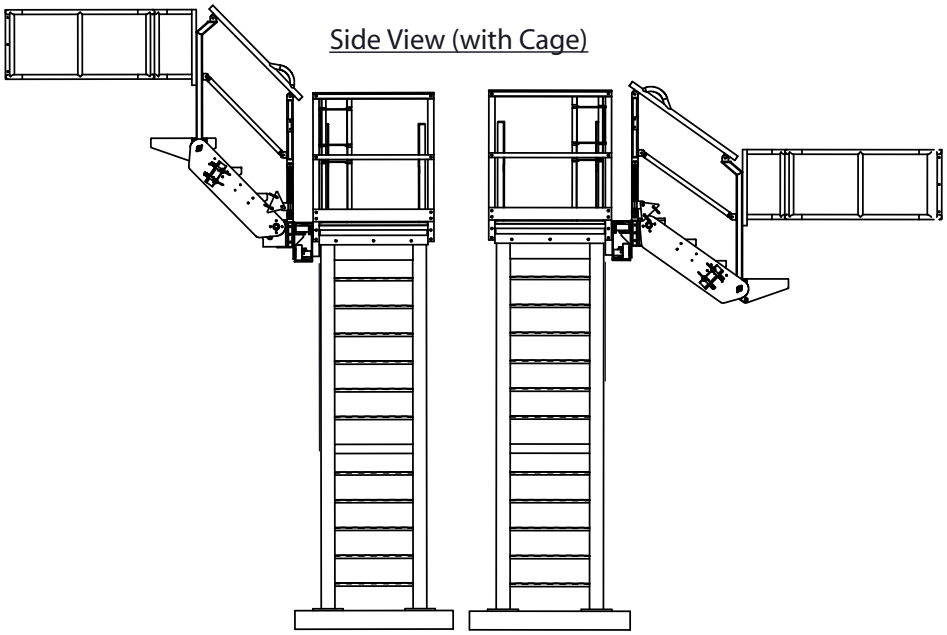

Hemco proudly offers an industry leading 5-year warranty on our galvanized carbon steel products.

Hemco
ramping up safety

2408 Karbach Street, Houston, Texas 77092 Tel: 713.681.2426 Fax: 713.681.2427 www.hemcoind.com