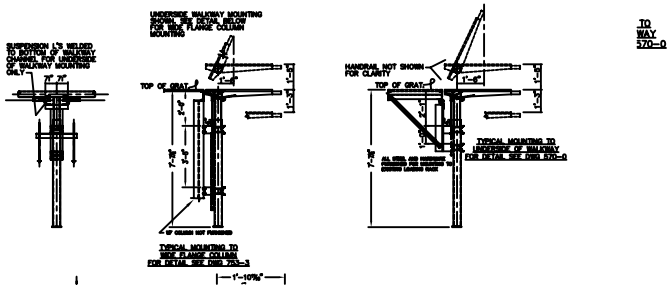

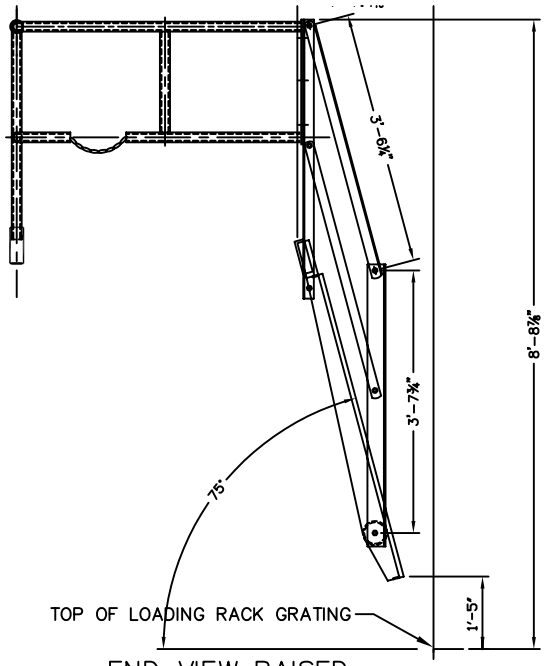

END VIEW RAISED

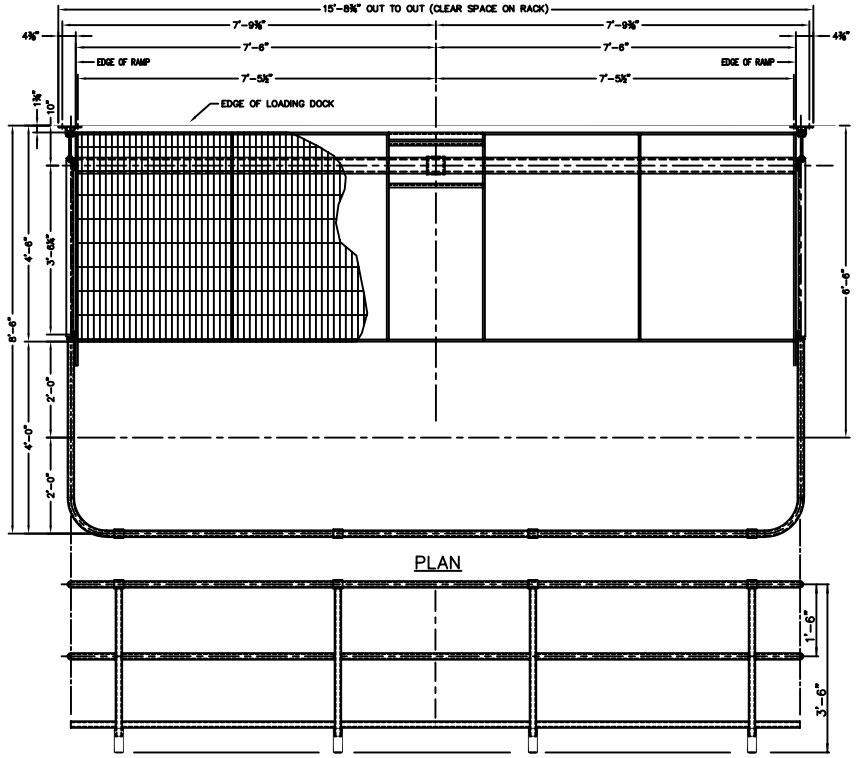

PLAN

FRONT VIEW

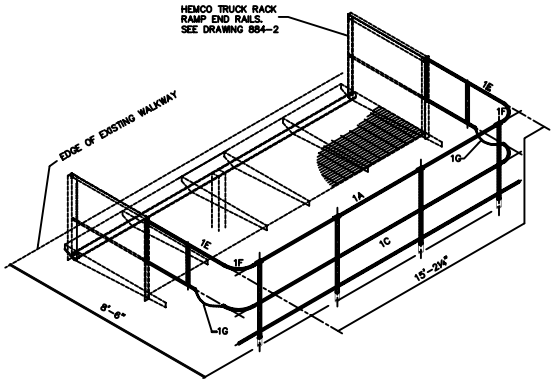

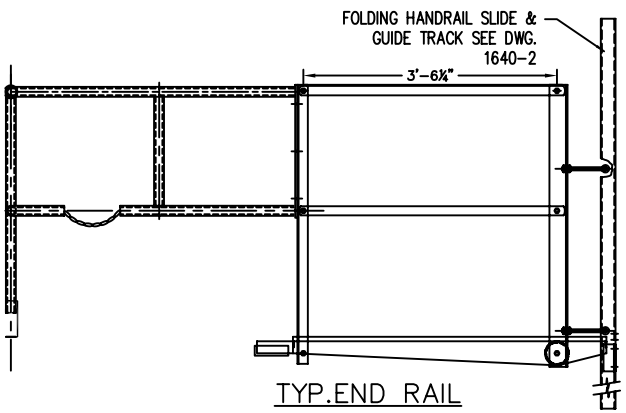

TYP.END RAIL

NOTE: THIS DRAWING HAS SUPERCEDED DRAWING 884-0, WITH MODIFICATIONS

REV.	DESCRIPTION	DATE

HEMCO INDUSTRIES, INC.
2408 Karbach Houston, Texas 77092
Tel: (713)681-2426

HEMCO EHO SERIES RAMP WITH SURROUND-U-RAIL

SCALE	DATE	DRAWN	CHECKED	DRAWING NUMBER
3/4"=1'-0"	7/27/93	WF		1640-0