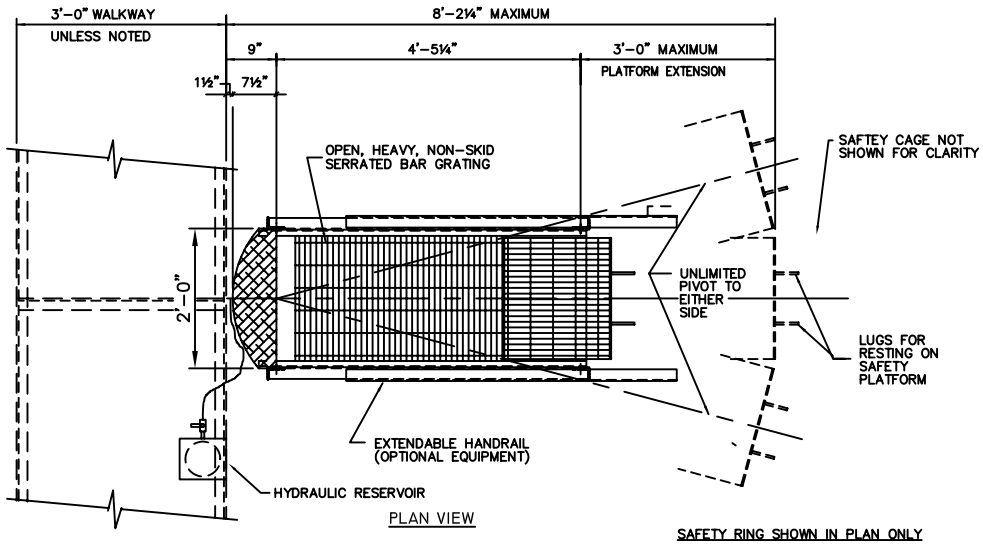

PLAN VIEW

SAFETY RING SHOWN IN PLAN ONLY

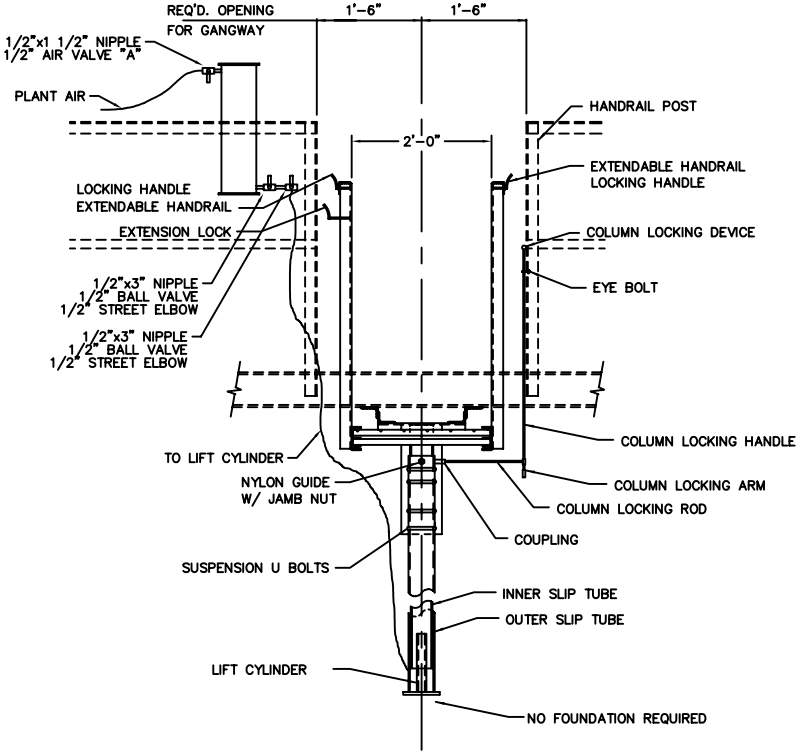

FRONT VIEW

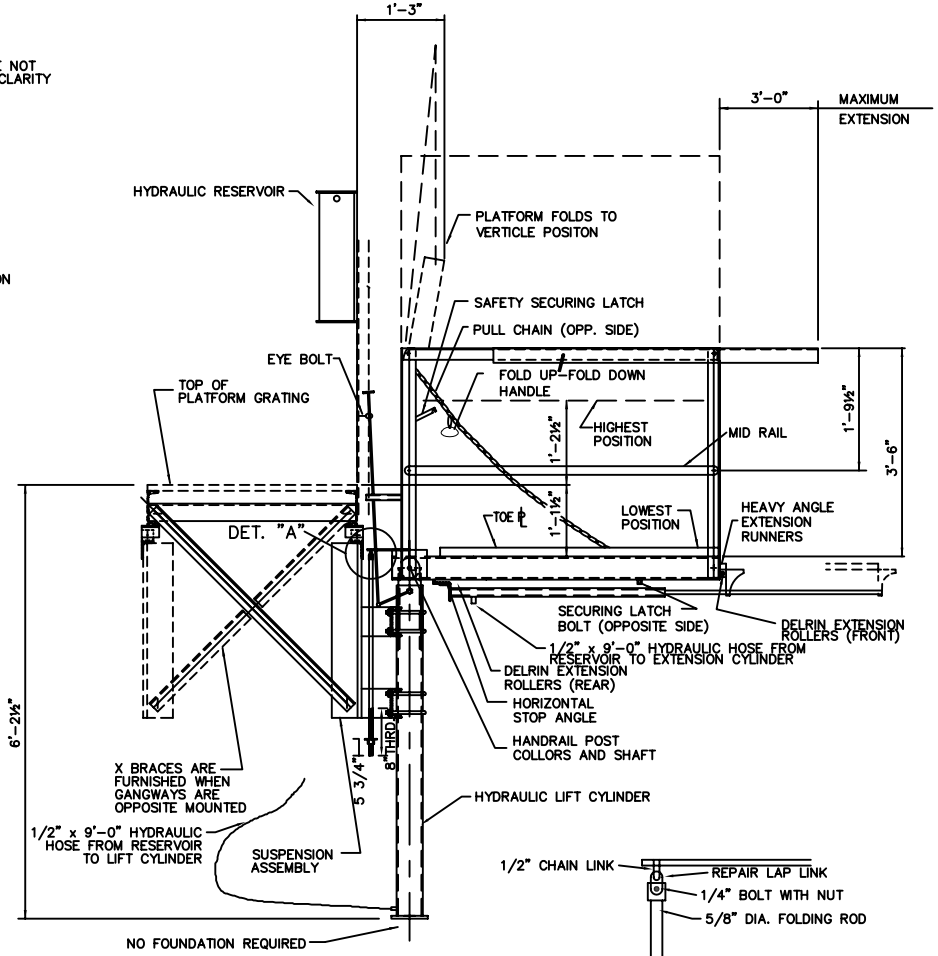

SIDE ELEVATION

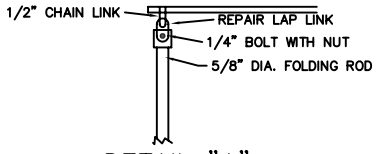

DETAIL "A"

REV.	DESCRIPTION	DATE

HEMCO INDUSTRIES, INC.
2408 Karbach Houston, Texas 77092
Tel: (713)681-2426

HEMCO GANGWAY
MODEL XHA-24

SCALE	DATE	DRAWN	CHECKED	DRAWING NUMBER
¾"=1'-0"	3/5/87	WF		288-1-1